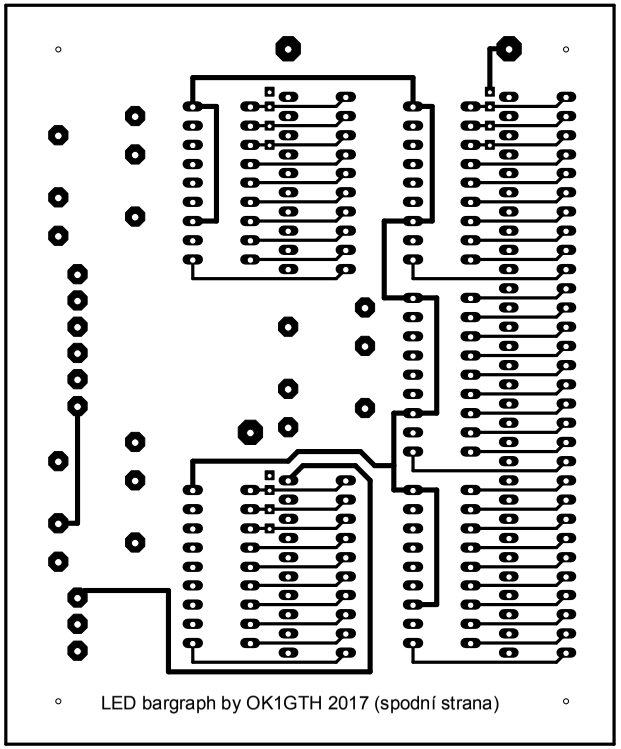
LED bargraph by OK1GTH 2017 (spodní strana)