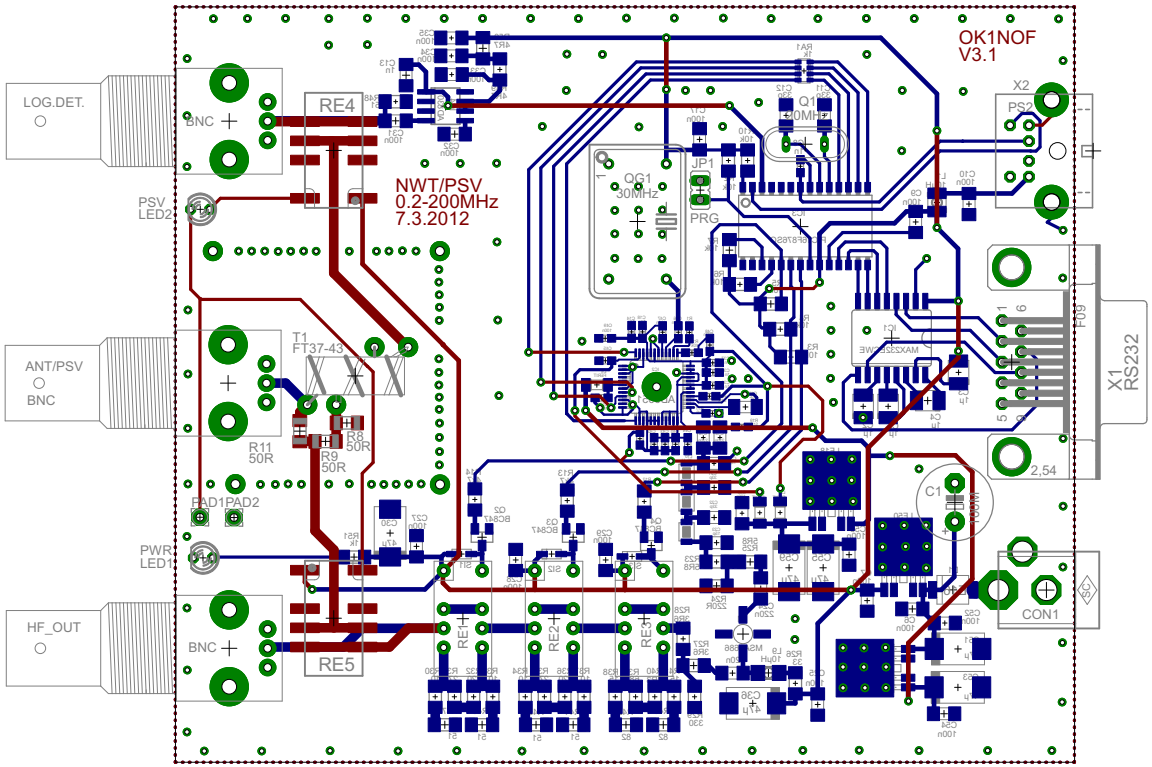
OK1NOF
V3.1
NWT/PSV
0.2-200MHz
7.3.2012
LOG.DET.
BNC
PSV
LED2
ANT/PSV
BNC
PWR
LED1
HF_OUT
BNC
RE4
RE5
RE1
RE2
RE3
T1
FT37-43
R11
50R
R9
50R
R8
50R
PAD1PAD2
QG1
30MHz
JP1
PRG
Q1
10MHz
X2
PS2
X1
RS232
2,54
C1
CON1